SERIE

PROVENCE II

Lavamanos de sobreponer 8P

Drop-in lavatory

Plano técnico

Technical Drawing

VISTA SUPERIOR / TOP VIEW

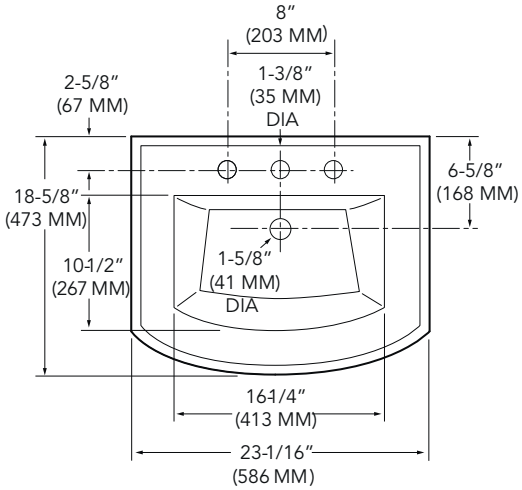

VISTA LATERAL / LATERAL VIEW

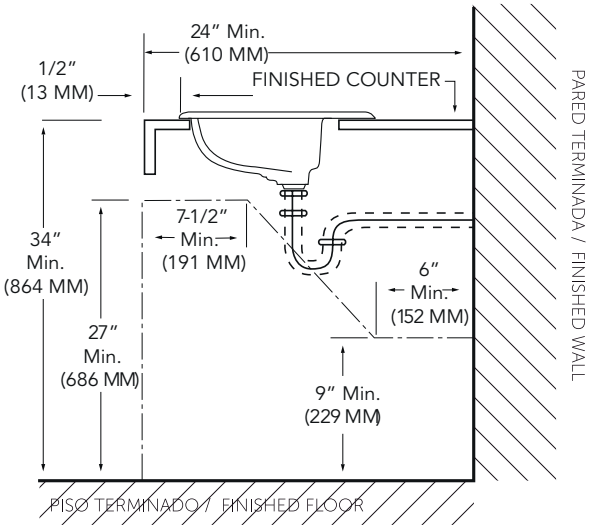

VISTA FRONTAL / FRONT VIEW

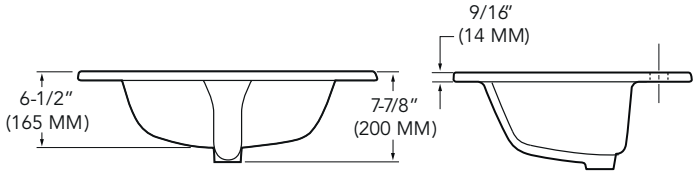

Unidades / Units: mm.

Estas dimensiones son nominales y son sujetas a cambio sin previo aviso.

These dimensions ar e nominal and are subject to change without prior notice.

AMERICAN STANDARD